OFFICINE OROBICHE

METALLIC VARIABLE AREA FLOWMETER

TMS Series



DESCRIPTION

The TMS Series Variable Area Metal Flowmeter consists of a vertical metal **cone** containing a guided **float** with an internal magnet. As the flow rate increases, the float—balanced between the weight force, buoyancy force, and fluid force—moves to a higher position to increase the fluid passage area. Outside the cone, not in contact with the fluid, is the housing containing a **pointer**, magnetically coupled to the float, which indicates the float's position. The instrument scale is fluid-specific and is calculated based on its operating process data: density, temperature, and pressure.

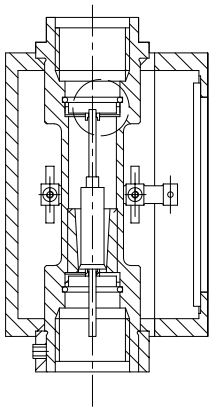

FEATURES

- Cost-effective, direct measurement with no external power supply required
- Designed for measuring low flow rates
- Suitable for both gases and liquids
- Magnetic coupling overcomes limitations of glass flowmeters (corrosive or hazardous fluids, high temperatures and pressures)
- Replaceable float
- Easy installation and maintenance
- Complete production control fully integrated inside the company and highly competent
- local suppliers
- Qualified welders and welding procedures compliant with ASME IX and EN ISO 15614
- Completely customizable on client's needs thanks to the support of our technical and sales departments
- Over 60 years company experience with instruments installed worldwide

APPLICATIONS

- Chemical and petrochemical
- Oil & Gas On and Off-shore
- Power plants
- Water treatment

TECHNICAL SPECIFICATIONS

- Pressure rating up to ANSI2500, PN400
- Gaskets-free corrosion resistant design
- IP66 housing
- Accuracy ± 5 % full scale value, the value varies with the viscosity
- Repeatability ± 0.5%
- Measuring range ratio 1-10, scale lenght ~ 40 mm
- Fluid's temperature form -196 to +400 °C and over on request
- Ambient temperature from -40 to +70 °C and over on request
- Available in many materials, depending on the application
- Wide range of accessories

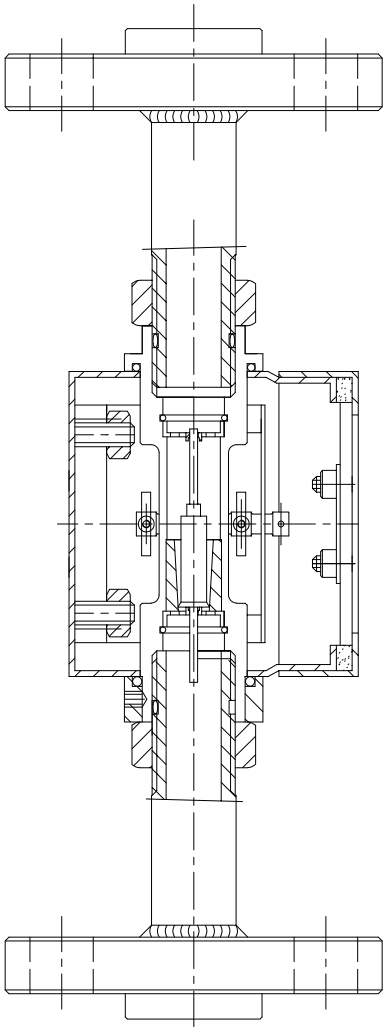

MODELS

Measurement ranges for Series TMS are defined in steps by model.
Flow rates in the table refer to water and air at normal conditions; values for other fluids or conditions are calculated by Officine Orobiche based on operating density. Variations in these parameters will compromise the instrument calibration.

Table B

WATER		AIR		ΔP [mbar]
CODE	FLOW RATE [L/h]	CODE	FLOW RATE [NL/h]	
A10	0.1 – 1	B10	3 – 30	15
A16	0.16 – 1.6	B16	5 – 50	15
A25	0.25 – 2.5	B25	8 – 80	15
A40	0.4 – 40	B40	12 – 120	15
A01	0.6 – 6.3	B01	20 – 200	18
A02	1 – 10	B02	30 – 300	18
A03	1.6 – 16	B03	50 – 500	18
A04	2.5 – 25	B04	80 – 800	18
A05	4 – 40	B05	120 – 1 200	18
A06	6.3 – 63	B06	200 – 2 000	18
A07	10 – 100	B07	300 – 3 000	25
A08	16 – 160	B08	500 – 5 000	25
A09	20 – 200	B09	600 – 6 000	20

Instruments with the flow self-regulator can have connections with smaller diameters, see the relevant chapter.

OTHER INSTRUMENTS

Since the variable area operating principle is based on gravity, the TMS Series Flowmeter can only be used for upward vertical flow. The **TMO Series** Metal Flowmeter, on the other hand, replaces gravity with the spring force of a spring, making it suitable for horizontal use.

For higher flow rates, the **TMG Series** Metal Flowmeter features models capable of measuring up to 100 m3/h of water or 1200 Nm3/h of air.

For applications with highly corrosive fluids, the **TMN Series** Metal Flowmeter features a simpler geometry than the TMG Series, allowing it to be manufactured in special materials such as titanium or nickel alloys, and it is also available with a PTFE lining.

Officine Orobiche also manufactures transparent glass Variable Area Flowmeters which, in addition to being more cost-effective, also allow the appearance of the fluid to be seen.

For other types of flow measurement, Officine Orobiche offers a full range of Primary Flow Elements, which includes Orifice Plates (including Metering Assemblies), Meter Runs, Orifice Flow Meters, Flow Nozzles, Venturi Tubes, Venturi Cones, Wedge Meters, and Averaging Pitot Tubes.

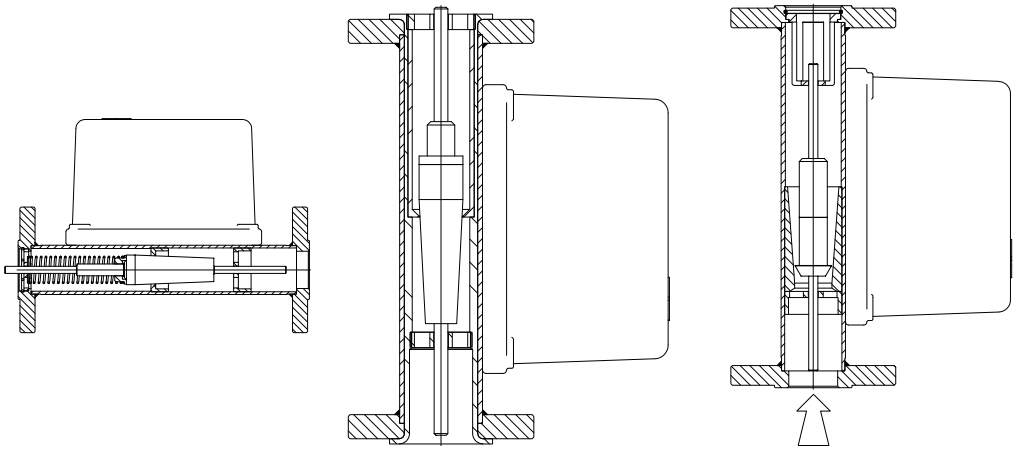

TMO Series TMN Series TMG Series

MATERIALS

Due to magnetic coupling, the instrument's body can only be made of non-ferromagnetic materials. The standard version is made of **dual-grade SS 316/316L**. On request it can be manufactured with the materials in the following table or more others.

CODE	MATERIAL
J or JL	SS 316/316L dual grade
HC	Alloy C276
MO	Alloy 400
825	Alloy 825
625	Alloy 625
20	Alloy 20
F44	Super austenitic UNS S31254
TI	Titanium

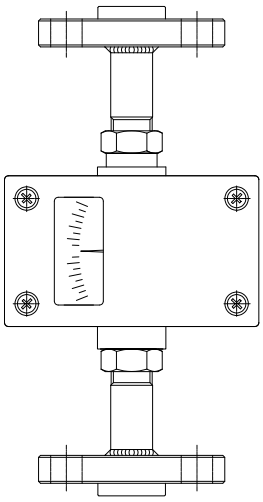

Flanged

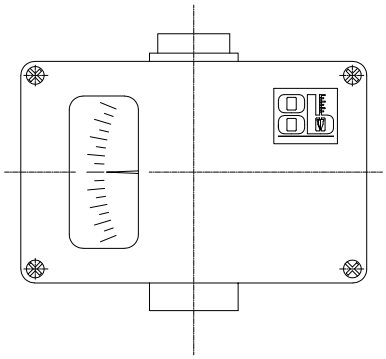

Threaded

CONNECTIONS

The TMS Series Metal Flowmeter is supplied with standard ¼" or ½" connections, GAS-F or NPT-F. On request, it can be supplied with the following process connections or others:

- **Flanged**
  - ASME B16.5
  - EN 1092/1
- **Threaded**
  - NPT-F or NPT-M
  - GAS-F or GAS-M
- DIN 11851 (Hygienic)
- Tri-clamp (BS4825)

Table A

CODE	CONNECTIONS
A	Flanges ASME B16.5
E	Flanges EN
U	Flanges UNI
D	DIN Hygienic
T	Tri-Clamp
G	Threads GAS-F
N	Threads NPT-F
X	Others

HOUSINGS

Instrument's housing is available in painted die-cast **aluminum** or **SS 316L**.

ALUMINUM	SS316L
	

SWITCHES

The TMS Series Flowmeter can be equipped with a **NAMUR Inductive Bistable Switch** (8 VDC 0.01 A) and a DIN 43650 - PG7 connector. Other connections are available on request.

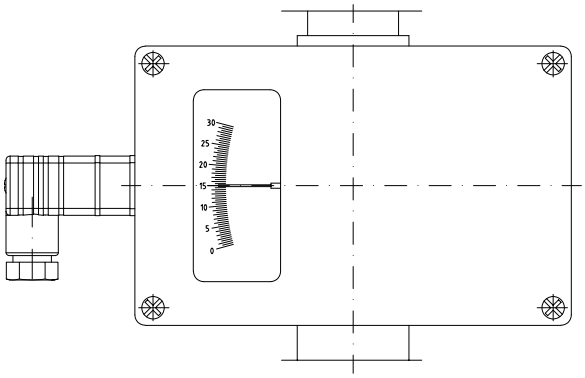

VALVES

The TMS Series Metal Flowmeter can be supplied with a needle **control valve**. The valve can be mounted on the inlet or outlet.
The valve is ¼" for flow rates up to 100 L/h of water or 1800 NL/h of air. For higher flow rates, the valve is ½".

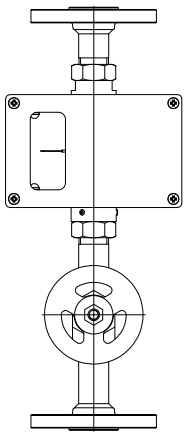

Integral Inlet Valve

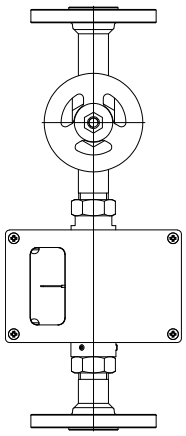

Mounted Outlet Valve

FLOW SELF-REGULATOR

The TMS Series Metal Flowmeter can be manufactured with a flow self-regulator that maintains the flow constant in case of pressure variations.

- Inlet regulator: variable inlet pressure, constant outlet (only for gas)
- Outlet regulator: constant inlet pressure, variable outlet (for both gas or liquid)

Two sizes are available based on instrument's flow rate.

Table E

CODE	SELF-REGULATOR	CONNECTIONS Ømin	AIR MAX FLOW RATE
RPJU	Outlet Small	¼"	3 Nm^3/h
RPJE	Inlet Small		
RGJU	Outlet Medium	½"	20 Nm^3/h
RGJE	Inlet Medium		

When the instrument mounts the Self-Regulator, the connections layout is Side-Side.

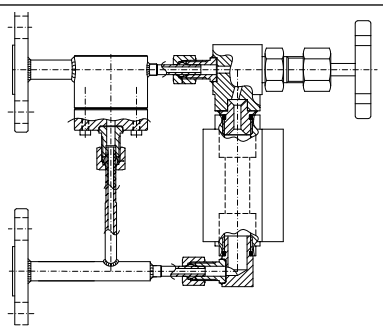

Flanged Outlet Self-Regulator

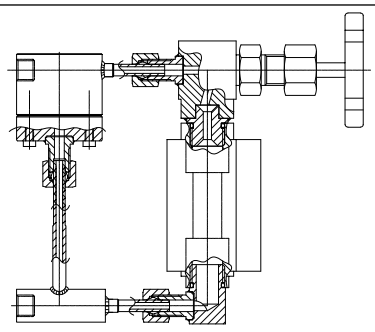

Threaded Outlet Self-Regulator

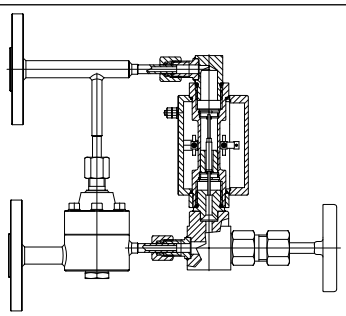

Flanged Inlet Self-Regulator

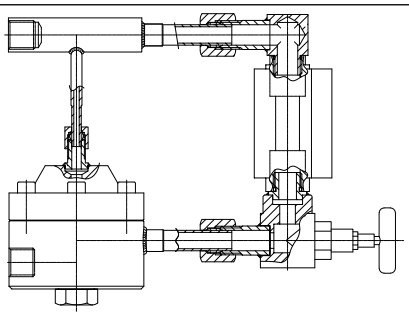

Threaded Inlet Self-Regulator

APPROVALS

On request the following approvals are available:

- PED 2014/68 UE
- ATEX II 2G Ex h IIC/IIB Tx Gb, II 2d Ex h IIIC Tx Db
- IECEx Ex h IIC T4 Gb / Ex h IIIC T100°C Db
- NACE MR-0175 or MR-0103
- EAC CU TR 012: 1 Ex h IIC Tx Gb
- Pattern Approval and Poverka for export to Russia

For electrical accessories:

- ATEX Ex d or i
- IECEx Ex d
- IECEx Ex h ib IIC T4 Gb / Ex h ib IIIC T100°C Db
- EAC Ex d or i
- IEC 61508 SIL 2
- IEC 60529:1989 IP66
- ECAS Ex for export to UAE

SPARE PARTS

Our company database contains information about the instruments manufactured in 60 years, to request spare parts for an installed instrument state the F number written in the top-right of the tagplate:



The standard spare kit includes float, stopper and clipring, depending and they depend on the model (Table A).

MODEL CODE

TMS100	A	BBB	CC		DD		EEEE	XX
			C0	C1	S1	S2		
	Connections: Table A	Model Flow Rate: Table B	Without Contact	With Contact	¼" valve	½" valve	Self-regulator: Table E	Any possible variation

DD, EEEE, XX are present only when applicable.

Example: TMS100.G.B07.C0.RPJE.XX

To request a quotation please state:

- Fluid density
- Fluid type (liquid or gas)
  - For liquids: operating viscosity
  - For gas operating temperature and pressure
- Area classification (safe or classified)
- Design temperature and pressure
- Connection details (type, DN, rating)
- Material

For instruments with valves or self-regulators, the pressure should be measured as per the following table:

Inlet Valve	Outlet Valve	Inlet Self-regulator	Outlet Self-regulator
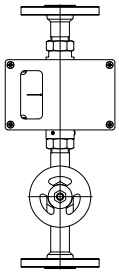	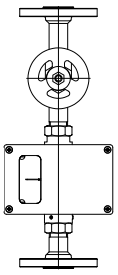	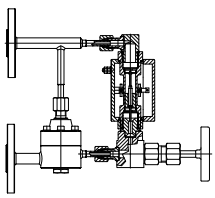	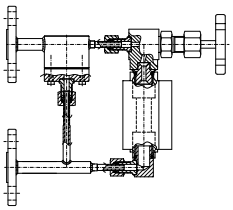
Outlet Pressure	Inlet Pressure	Outlet Pressure	Inlet Pressure

Our technical and commercial departments are available to discuss any variation or customization not mentioned in this catalogue.

Officine Orobiche S.r.l.

Via Paglia, 22 - 24050 Zanica (Bergamo) - Italy
Tel. +39 035 4530 211

www.officineorobiche.it
info@officineorobiche.it