OFFICINE OROBICHE

METALLIC VARIABLE AREA FLOWMETER

TMN Series



DESCRIPTION

The Metallic Variable Area Flowmeter TMN Series consists in a vertical metal **cone** with a guided **float** inside with an internal magnet. As flow increases, the float, in equilibrium between weight force, buoyancy force, and fluid thrust, moves to a higher position, in order to increase the fluid's passage surface.

Outside the cone, not in contact with the fluid, there's a housing containing a **dial** indicator magnetically coupled to the float, which mirrors its position.

The instrument's scale is customized for each fluid and calculated using its operating process data: density, temperature, and pressure.

FEATURES

- Cost-effective, direct measurement with no external power supply required
- Wide measurable flow ranges
- Magnetic coupling overcomes limitations of glass flowmeters (corrosive or hazardous fluids, high temperatures and pressures)
- Replaceable float
- Easy installation and maintenance
- Complete production control fully integrated inside the company and highly competent local suppliers.
- Qualified welders and welding procedures compliant with ASME IX and EN ISO 15614.
- Completely customizable on client's needs thanks to the support of our technical and sales departments
- Over 60 years company experience with instruments installed worldwide

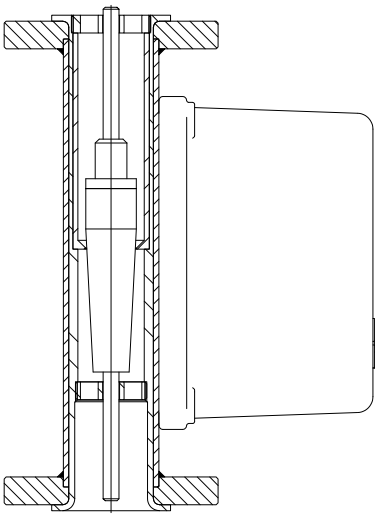

APPLICATIONS

- Chemical and petrochemical
- Oil & Gas On and Off-shore
- Power plants
- Water treatment

TECHNICAL SPECIFICATIONS

- Pressure rating up to ANSI2500, PN400
- Gaskets-free corrosion resistant design
- Accuracy ± 1.5 % full scale value, the value varies with the viscosity
- Repeatability ± 0.25%
- Measuring range ratio 1-10, scale lenght ~ 100 mm
- Fluid's temperature form -196 to +400 °C and over on request
- Ambient temperature from -40 to +70 °C and over on request
- Available in many materials, depending on the application
- Wide range of accessories

MODELS

Measurement ranges for Series TMN are defined in steps by model. Flow rates in the table refer to water and air at normal conditions; values for other fluids or conditions are calculated by Officine Orobiche based on operating density. Variations in these parameters will compromise the instrument calibration.

Table B

CONNECTIONS Ømin	METALLIC VERSION		PTFE VERSION		ΔP [mbar]
	CODE	FLOW RATE [L/h]	CODE	FLOW RATE [L/h]	
15 (½")	A01	2.5 – 25	B01	1.6 – 16	130
	A02	4.0 – 40	B02	2.5 – 25	130
	A03	6.3 – 63	B03	4 – 40	130
	A04	10 – 100	B04	6.3 – 63	140
	A05	16 – 160	B05	10 – 100	150
	A06	25 – 250	B06	16 – 160	170
	A07	40 – 400	B07	25 – 250	160
	A08	63 – 630	B08	40 – 400	190
25 (1")	A09	100 – 1 000	B09	63 – 630	90
	A10	160 – 1 600	B10	100 – 1 000	90
	A11	250 – 2 500	B11	160 – 1 600	120
	A12	400 – 4 000	B12	250 – 2 500	150
50 (2")	A13	630 – 6 300	B13	400 – 4 000	190
	A14	1 000 – 10 000	B14	630 – 6 300	210
	A15	1 600 – 16 000	B15	1 000 – 10 000	230
	A16	2 500 – 25 000	B16	1 600 – 16 000	300
80 (3")	A17	4 000 – 40 000	B17	2 500 – 25 000	230
100 (4")	A18	6 300 – 63 000	B18	4 000 – 40 000	240

Instruments with the flow self-regulator can have connections with smaller diameters, see the relevant chapter.

OTHER INSTRUMENTS

Since the Variable Area operating principle is based on gravity, the TMN Series Flowmeter can only be used for upward vertical flow. The **TMO Series** Metal Flowmeter, on the other hand, replaces the force of gravity with a spring's elastic force, making it suitable for horizontal use

For lower flow rate, the Metallic Variable Area Flowmeter **TMS Series** can measure down to 0.1 L/h of water or 3 NL/h of air.

The Metal Flowmeter **TMG Series** features a geometry that also allows for the measurement of gaseous fluids or viscous liquids.

Officine Orobiche manufactures also transparent glass variable area flowmeters, which are more economical and allow visual fluid inspection.

For other types of flows gauges, Officine Orobiche manufacture a whole range of Primary Flow Elements that includes Orifice Plates, Orifice Plate Assemblies, Meter Runs, Flow Nozzles, Venturi Tubes, Venturi Cone Meters, Wedge Meters and Multiport Averaging Pitot Tubes.

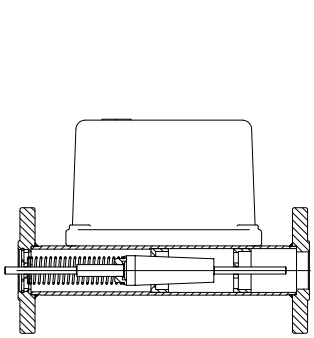

TMO Series

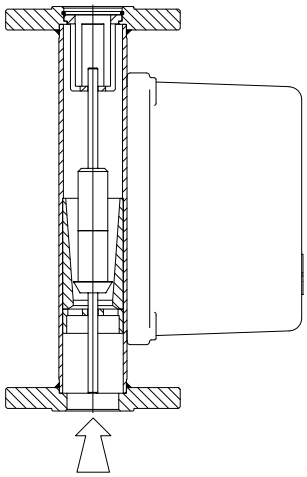

TMG Series



TMS Series

MATERIALS

Due to magnetic coupling, the instrument's body can only be made of non-ferromagnetic materials. The standard version is made of **dual-grade SS 316/316L**. On request it can be manufactured with the materials in the following table or more others.

For highly corrosive fluids, a version in SS316/316L internally lined with PTFE with a PTFE float is also available.

CODE	MATERIAL
J or JL	SS 316/316L dual grade
HC	Alloy C276
MO	Alloy 400
825	Alloy 825
625	Alloy 625
20	Alloy 20
F44	Super austenitic UNS S31254
TI	Titanium
T	SS 316/316L dual grade PTFE-lined

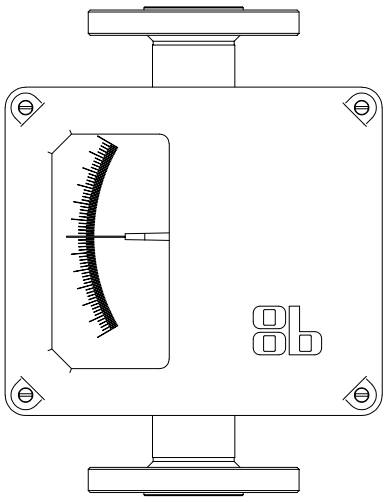

Flanged

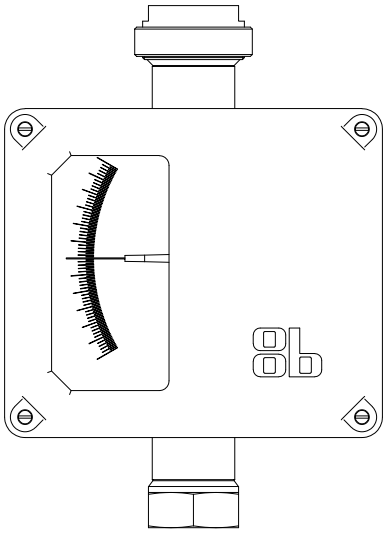

Threaded

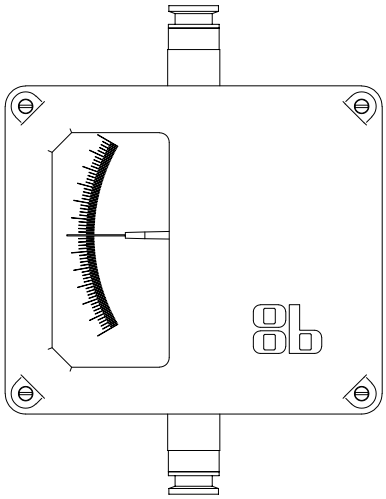

Tri-Clamp

CONNECTIONS

The TMN Series Metallic Flowmeter can be supplied with the following process connections or others on request:

- **Flanged**
  - ASME B16.5
  - EN 1092/1
- **Threaded**
  - NPT-F or NPT-M
  - GAS-F or GAS-M
- DIN 11851 (Hygienic)
- Tri-clamp (BS4825)

The PTFE-lined version is available only flanged with an RF or RTJ raised face.

Table A

CODE	CONNECTIONS
A	Flanges ASME B16.5
E	Flanges EN
U	Flanges UNI
D	DIN Hygienic
T	Tri-Clamp
G	Threads GAS-F
N	Threads NPT-F
X	Others

HOUSINGS

Instrument's housing is available in painted die-cast **aluminum** or **SS 316L**.

For versions with electrical accessories it's available in **IP66** version or **explosion-proof Ex d** IP68 version for classified areas.

	ALUMINUM	SS316L
STANDARD IP66		
EXPLOSION-PROOF IP68 Ex d		

When electrical accessories are present, the housing has a PG11, ½" NPT, or ISO M20×1.5 entry. On request it can be supplied with an additional entry, reductions, or cable glands as accessories.

TRANSMITTERS

The TMN Series Flowmeter can be equipped with a **4-20 mA**, Fieldbus, or Profibus transmitter inside the housing. The 4-20 mA analog signal can also be overlaid with a **HART digital signal**. For applications in hazardous areas, the transmitter is available in an **intrinsically safe Ex i version**.

A self-powered four-digit **LCD display** showing the percentage value of the 4-20 mA signal can be fitted as an accessory on the instrument's scale. This configuration combines the mechanical indication of the pointer with the analog indication of the display.

The following table summarizes the different combinations.

Table D

CODE	TRANSMITTER
T0	No transmitter
T1	Standard 4-20 mA
T2	4-20 mA Ex i
T3	4-20 mA HART 7
T4	4-20 mA HART 7 Ex i
TF	Foundation Fieldbus
TP	PROFIBUS

The optional local display is indicated by "+D" in the code.

SWITCHES

The TMN Series Flowmeter can be equipped with one or two bistable switches of the **Reed** (30 VDC 0.1 A) or **NAMUR** (8 VDC 0.01 A) type.

Table E

CODE	SWITCH
C1	n°1 Reed *
C2	n°2 Reed *
C3	n°1 NAMUR
C4	n°2 NAMUR

* High or low alarm only

VALVES

The TMN Series Metal Flowmeter can be supplied with an i**ntegrated inlet control valve** of the needle or globe/needle type. On request, the valve can be supplied on the outlet, but not as an integral type, otherwise it would not be possible to remove the float for maintenance.

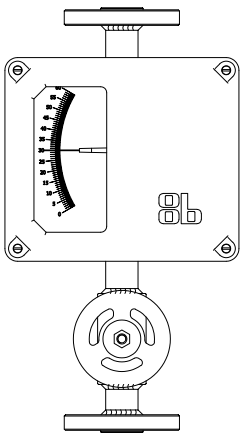

Integral Inlet Valve

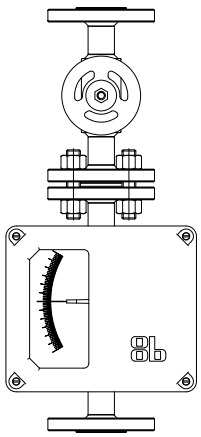

Mounted Outlet Valve

OTHER ACCESSORIES AND VARIATIONS

- Double scale
- Electric, steam, or self-heating cable tracing
- Insulation
- High-temperature version up to 450 °C (higher on request)
- Full-penetration welds with WN flanges
- Connections curves and reducers
- Custom panels per customer design
- Standard Officine Orobiche or customer coatings
- Surge protector for electrical parts

			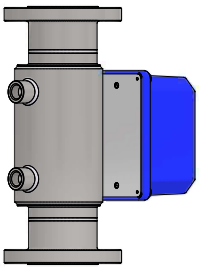
90° outlet curve	High temperature version	Cryogel Insulation	Steam jacket tracing

APPROVALS

On request the following approvals are available:

- PED 2014/68 UE
- ATEX II 2G Ex h IIC/IIB Tx Gb, II 2d Ex h IIIC Tx Db
- IECEx Ex h IIC T4 Gb / Ex h IIIC T100°C Db
- NACE MR-0175 or MR-0103
- EAC CU TR 012: 1 Ex h IIC Tx Gb
- Pattern Approval and Poverka for export to Russia

For electrical accessories:

- ATEX Ex d or i
- IECEx Ex d
- IECEx Ex h ib IIC T4 Gb / Ex h ib IIIC T100°C Db
- EAC Ex d or i
- IEC 61508 SIL 2
- IEC 60529:1989 IP66
- ECAS Ex for export to UAE

SPARE PARTS

Our company database contains information about the instruments manufactured in 60 years, to request spare parts for an installed instrument state the F number written in the top-right of the tagplate:



The standard spare kit includes float, stopper and clipring, depending and they depend on the model (Table A).

MODEL CODE

TMN250	A	BB	CCC	DD	EE	XX
	Connection type: Table A	Connections Ømin: Table B	Flow Model: Table B	Transmitter: Table D	Alarm: Table E	Any possible variation

EE and XX are present only when applicable.

Example: TMN250.A.15.A09.T0.XX

To request a quotation please state:
- Fluid density
- Area classification (safe or classified)
- Design temperature and pressure
- Connection details (type, DN, Rating)
- Material

When the instrument is equipped with valves, the pressure should be measured as per the following table:

Inlet Valve	Outlet Valve
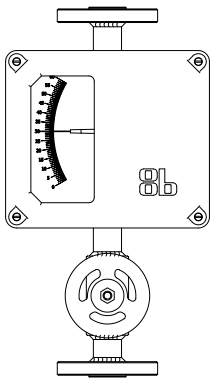	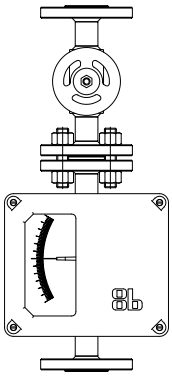
Outlet Pressure	Inlet Pressure

Our technical and commercial departments are available to discuss any variation or customization not mentioned in this catalogue.

Officine Orobiche S.r.l.

Via Paglia, 22 - 24050 Zanica (Bergamo) - Italy
Tel. +39 035 4530 211

www.officineorobiche.it
info@officineorobiche.it