OFFICINE OROBICHE

REFLEX LEVEL GAUGE
R Series



DESCRIPTION

The Reflex Glass Level Gauge R Series consists in a steel body, with a particular crystal, fixed with a steel cover. The body has two screwed valves in order to mount it to the tank. The special geometry of the glass ensures that, in the presence of gas or vapor, light rays are totally reflected (appearing light in color), whereas in the presence of liquid, the light is absorbed into the fluid by refraction, making the liquid phase appear dark. This solution provides a clear and immediate level indication even when the level lies between two sections.

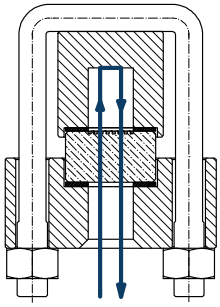

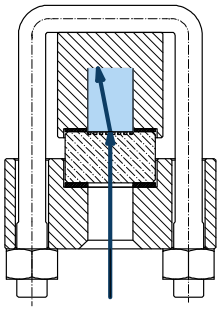

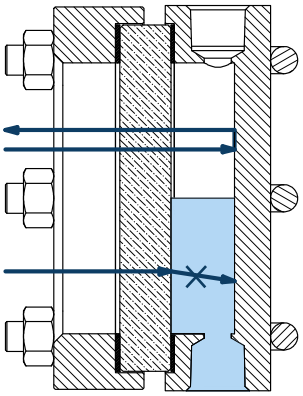

FEATURES

- Complete production control fully integrated inside the company and highly competent local suppliers.
- Designed compliant with ASME-Boiler and EN standard.
- Qualified welders and welding procedures compliant with ASME IX and EN ISO 15614.
- Completely customizable on client's needs thanks to the support of our technical and
- sales departments.
- Over 60 years company experience with instruments installed in the entire world.
- Suitable for the most extreme conditions: temperature from -196 °C to more than 300 °C and pressures up to 400 bar.
- Long working life ensured by high quality materials.
- Spares parts mounted in few minutes without dismount the instrument.

APPLICATIONS

- Chemical and petrochemical
- Oil & Gas On and Off-shore
- Power plants
- Machine construction
- Naval construction
- Water treatment

TECHNICAL SPECIFICATIONS

- Rating up to ANSI 2500, PN 400
- Available in different materials, depending on the application
- High temperature borosilicate glasses
- Suitable for full vacuum applications
- Immediate, continous and clear level indication

MODEL	P max barg	T max °C
RBB	20	211
RMB	20	211
RAC	20	211
RHC	Not suitable	
RHH	Not suitable	
RHX	Not suitable	
RLB	20	211

Operating limits for water/steam

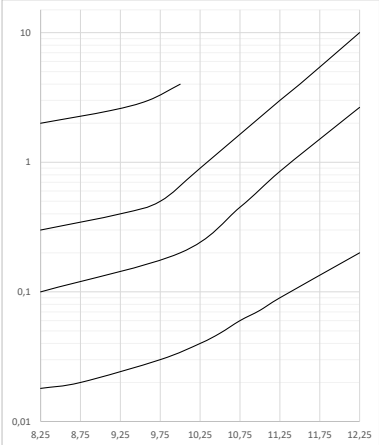

Corrosion depending on acidity

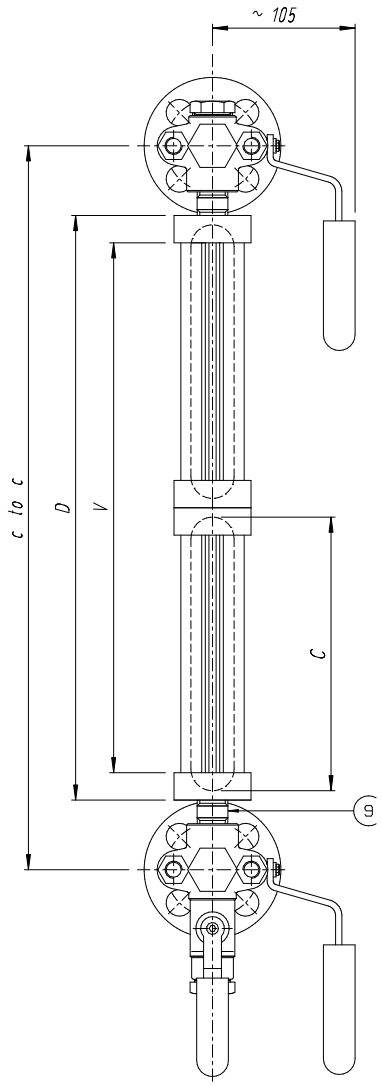

RBB model with NY valves

OPERATING LIMITS

When used in steam application is recommended to periodically check the glasses corrosion status because the high temperature water steam is highly corrosive for glass.

The table shows the pressure and temperature limits for each model when used in water steam conditions.

For higher values we sudgest to use a flat transparent glasses, as the one used in the Officine Orobiche Trasparent Level Gauge T Series. This instrument can even protect the glass with a mica shield to further increase its operating limits.

MODELS

MOD.	RATING	GLASS WIDTH	DRAWING	DIMENSIONS TABLE
RBB	PN40	30 mm	RBB	A
RMB	PN64	30 mm	R	A
RAC	PN100	34 mm	R	A
RHC	PN160	34 mm	R	A
RHH	PN250	34 mm	RHH	RHH
RHX	PN400	34 mm	RHX	RHX
RLB	PN64	34 mm	RLB	RLB

In the following tables

- All measures are in mm
- Connection ranges are referred to side-side position
- RLB model is the large chamber version
- In the Measure Number, the first cipher is the number of sections and the second one is the crystal dimension

DRAWING RBB

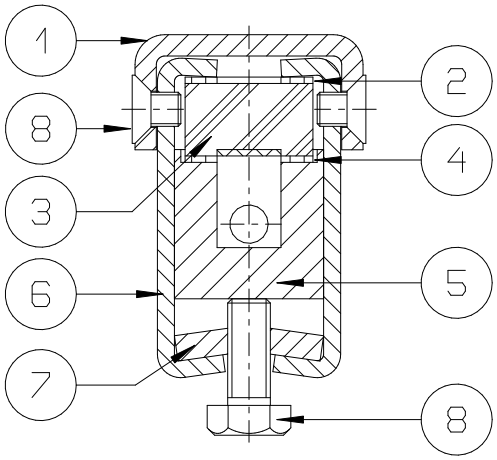

POS	DESCRIPTION
1	Holding bracket
2	Cushion
3	Crystal
4	Gasket
5	Body
6	Cover plate
7	Plate
8	Screw
9	Nipple

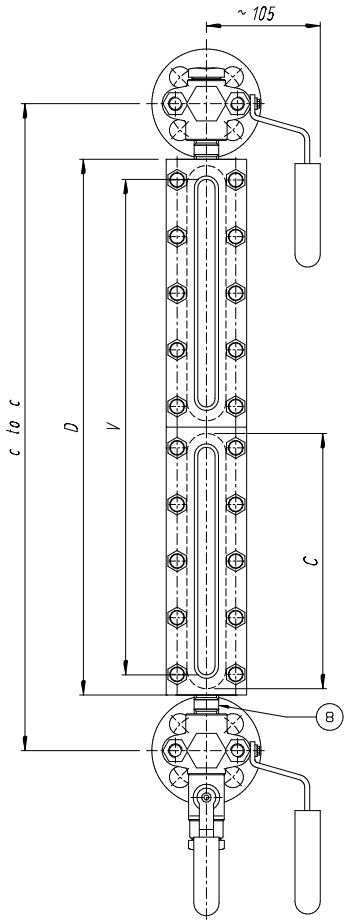

With NY Valves

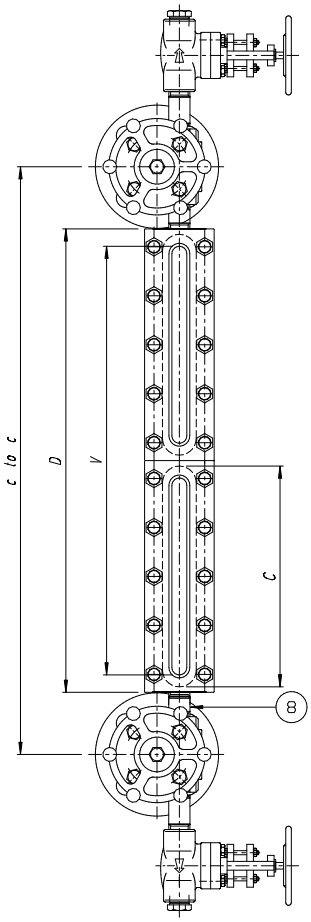

With YY Valves

TABLE A

Measure	V	D	C	Minimum C to C for valves				Weight [~kg]
				NY	NX	YY	YX	
11	90	128	115	197	234	216	256	12
12	115	153	140	222	259	241	281	13
13	140	178	165	247	284	266	306	13
14	165	203	190	272	309	291	331	14
15	195	233	220	302	339	321	361	15
16	225	263	250	332	369	351	391	17
17	255	293	280	362	399	381	421	18
18	295	333	320	402	439	421	461	19
19	315	353	340	422	459	441	481	20
24	368	406	190	475	512	494	534	22
25	428	466	220	535	572	554	594	24
26	488	526	250	595	632	614	654	26
27	548	586	280	655	692	674	714	28
28	628	666	320	735	772	754	794	31
29	668	706	340	775	812	794	834	32
36	751	789	250	858	895	877	917	35
37	841	879	280	948	985	967	1007	38
38	961	999	320	1068	1105	1087	1127	42
39	1021	1059	340	1128	1165	1147	1187	44
47	1134	1172	280	1241	1278	1260	1300	48
48	1294	1332	320	1401	1438	1420	1460	54
49	1374	1412	340	1481	1518	1500	1540	56
57	1427	1465	280	1534	1571	1553	1593	59
58	1627	1665	320	1734	1771	1753	1793	66
59	1727	1765	340	1834	1871	1853	1893	69
68	1960	1998	320	2067	2104	2086	2126	77
69	2080	2118	340	2187	2224	2206	2246	81
79	2433	2471	340	2540	2577	2559	2599	93

DRAWING R

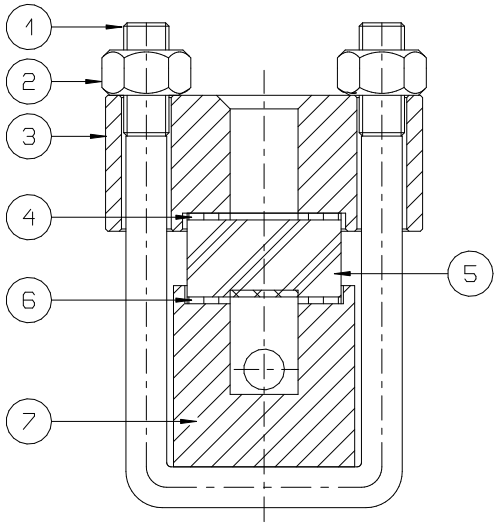

POS	DESCRIPTION
1	Stud bolt
2	Nut
3	Cover
4	Cushion
5	Crystal
6	Gasket
7	Body
8	Nipple

TABLE RHH

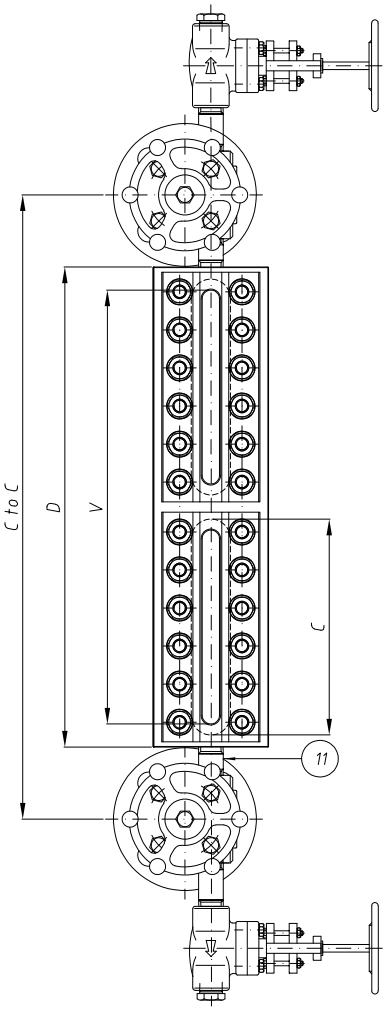

Measure	V	D	C	Minimum C to C for valves		Weight [~kg]
				YY	YX	
11	95	135	115	223	263	32
12	120	160	140	248	288	33
13	145	185	165	273	313	33
14	170	210	190	298	338	34
15	200	240	220	328	368	36
16	230	270	250	358	398	38
17	260	300	280	388	428	39
18	300	340	320	428	468	41
19	320	360	340	448	488	43
24	380	420	190	508	548	49
25	440	480	220	568	608	52
26	500	540	250	628	668	56
27	560	600	280	688	728	59
28	640	680	320	768	808	63
29	680	720	340	808	848	66
36	770	810	250	898	938	74
37	860	900	280	988	1028	79
38	980	1020	320	1108	1148	84
39	1040	1080	340	1168	1208	89
47	1160	1200	280	1288	1328	98
48	1320	1360	320	1448	1488	106
49	1400	1440	340	1528	1568	112
57	1427	1465	280	1588	1628	118
58	1627	1665	320	1788	1828	128
59	1760	1765	340	1888	1928	135
68	1960	1998	320	2128	2168	149
69	2080	2118	340	2248	2288	158
79	2433	2471	340	2608	2648	181

DRAWING RHH

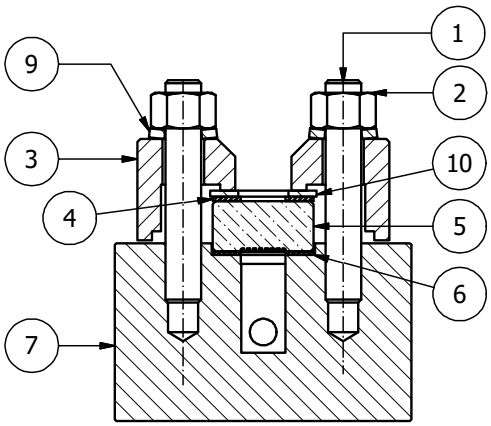

POS	DESCRIPTION
1	Stud bolt
2	Nut
3	Cover
4	Cushion
5	Crystal
6	Gasket
7	Body
8	Nipple
9	Spring washer

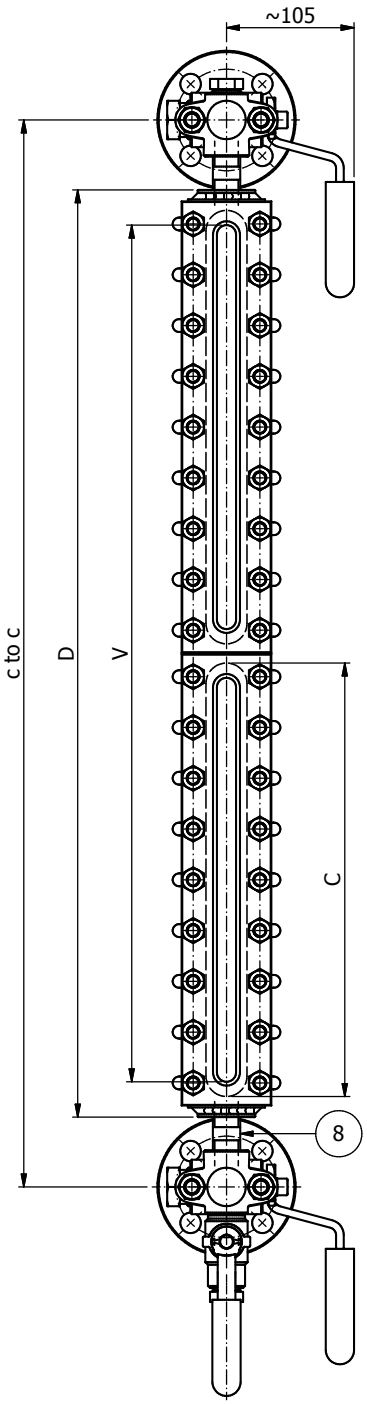

With NY Valves

TABLE RLB

Measure	V	D	C	Minimum C to C for valves				Weight [~kg]
				NY	NX	YY	YX	
11	90	183	115	145	145	145	145	12
12	115	208	140	170	170	170	170	13
13	140	233	165	195	195	195	195	13
14	165	258	190	220	220	220	220	14
15	195	288	220	250	250	250	250	15
16	225	318	250	280	280	280	280	17
17	255	348	280	310	310	310	310	18
18	295	388	320	350	350	350	350	19
19	315	370	340	370	370	370	370	20
24	368	461	190	423	423	423	423	22
25	428	521	220	483	483	483	483	24
26	488	581	250	543	543	543	543	26
27	548	641	280	603	603	603	603	28
28	628	721	320	683	683	683	683	31
29	668	761	340	723	723	723	723	32
36	751	844	250	806	806	806	806	35
37	841	934	280	896	896	896	896	38
38	961	1054	320	1016	1016	1016	1016	42
39	1021	1114	340	1076	1076	1076	1076	44
47	1134	1227	280	1189	1189	1189	1189	48
48	1294	1387	320	1349	1349	1349	1349	54
49	1374	1467	340	1429	1429	1429	1429	56
57	1427	1520	280	1482	1482	1482	1482	59
58	1627	1720	320	1682	1682	1682	1682	66
59	1727	1820	340	1782	1782	1782	1782	69
68	1960	2053	320	2015	2015	2015	2015	77
69	2080	2173	340	2135	2135	2135	2135	81
79	2433	2526	340	2488	2488	2488	2488	93

DRAWING RLB

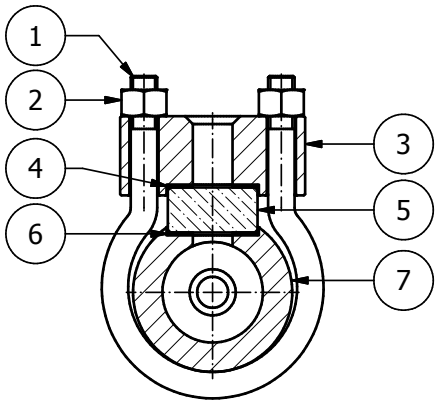

POS	DESCRIZIONE
1	Stud bolt
2	Nut
3	Cover
4	Cushion
5	Crystal
6	Cushion
7	Body
8	Nipple

Large chamber version.

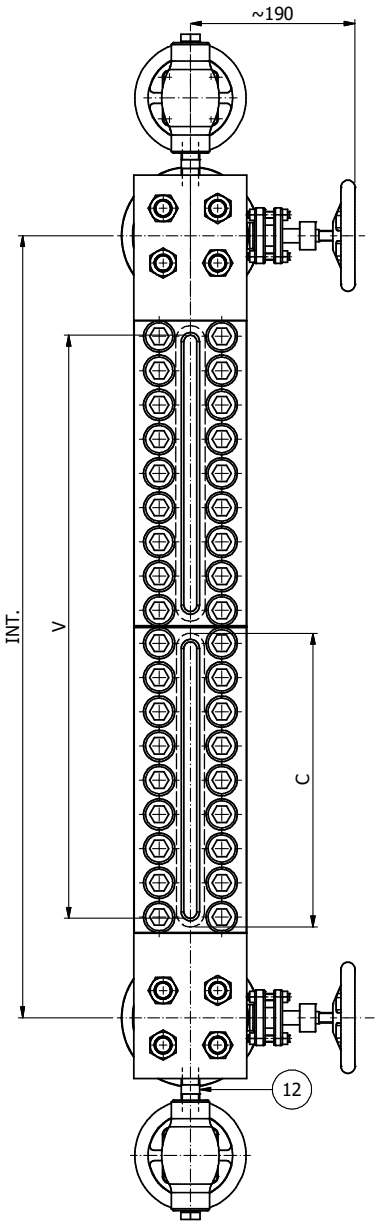

TABLE RHX

Measure	V	C	Minimum C to C
11	95	115	223
12	120	140	248
13	145	165	273
14	170	190	298
15	200	220	328
16	230	250	358
17	260	280	388
18	300	320	428
19	320	340	448
24	380	190	508
25	440	220	568
26	500	250	628
27	560	280	688
28	640	320	768
29	680	340	808
36	770	250	898
37	860	280	988
38	980	320	1108
39	1040	340	1168
47	1160	280	1288
48	1320	320	1448
49	1400	340	1528
57	1427	280	1588
58	1627	320	1788
59	1727	340	1888
68	1960	320	2128
69	2080	340	2248
79	2433	340	2608

DRAWING RHX

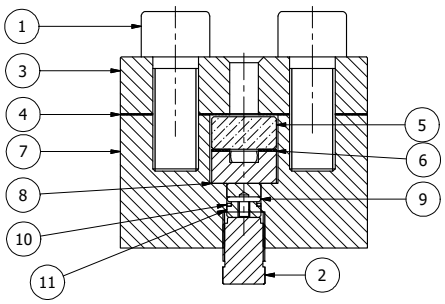

POS	DESCRIZIONE
1	Screw
2	Pressure screw
3	Cover
4	Gasket
5	Crystal
6	Glass gasket
7	Body
8	Pressure plate
9	O-ring gasket
10	Siling ring
11	Pressure piece
12	Nipple

CONNECTIONS AND VALVES

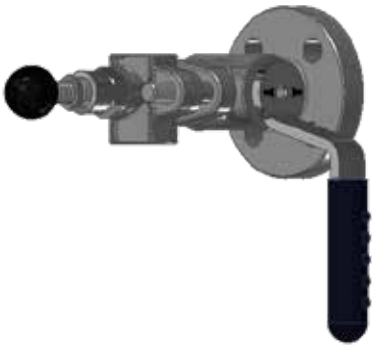

Flanged NY Valve



Flanged YY Valve



NY Valve with drain / vent valve

The Level Gauge R Series can be supplied with the following process and drain/vent connections:

- **Flanged**
  - o ANSI B16.5
  - o EN 1092/1
- **Threaded**
  - o NPT-F o NPT-M
  - o GAS-F o GAS-M
- **Weld stub**
  - o SW - socket weld
  - o BW - butt weld

The standard instrument is supplied with Side-Side connections. On request it can have the followings positions:

COD	POSITION
LL	Side - Side
LF	Side - Bottom
TL	Top - Side
TF	Top - Bottom

The instrument is supplied with the following shut-off valves:

- Cock type NY (**PN 100**) with 90° quick action
- OS&Y type YY (**PN250**) with offset outside screw

Two versions that allow to rotate the body on field are available as option:

- Cock type NX (**PN 40**) with stuffing box and smooth nipple
- OS&Y type YX (**PN250**) with offset outside screw, 3-pieces coupling and spiral wound gasket

VERSION	RATING	TYPE	CONNECTION TO BODY	ACTION	ROTABLE
NY	PN 100	Cock	Threaded nipples	90° quick action handle	NO
NX	PN 40	Cock	Stuf¬fing box and smooth nipples	90° quick action handle	YES
YY	PN 250	OS&Y	Threaded nipples	Handweel	NO
YX	PN 250	OS&Y	3-pieces joint and spiral wound gasket	Handweel	YES

All the valves versions have a SS 316 safety ball that avoids leakages in case of glass breakage.
As accessory they can be supplied with a check that ease the start-up phase by moving the safety ball.

On request the instrument can be supplied also with drain and vent valves.

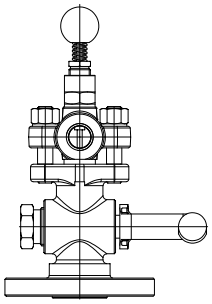

Cock type NY valve with ball check

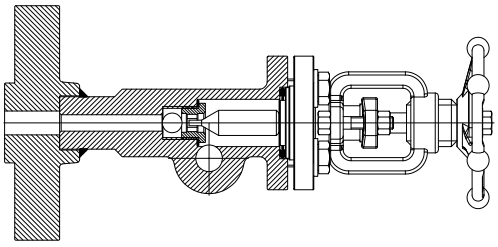

OS&Y type YY valve



OTHER INSTRUMENTS

The tranparent Level Gauge **T Series**, with its flat glasses, can show also the liquid color or the eventual presence of foam or bubbles and it can also come with a LED illuminator.

For low pressure and temperature applications, the Glass Tube Level Gauge **VBB Series** provides a continuous level indication.

Transparent and Reflex Level Gauges **TJB and RJB Series** can be welded directly on the tank's walls.

In order to overcome the limits in steam conditions, the Bicolor Level Gauge **BHO** is suitable up to 210 bar at 368 °C. Using an illuminator and the optical refraction, on the instrument's display the water would appear green and the vapor would appear red, giving a clear distinction of the liquid level.

For further information see the instruments relative catalogues.



T



VBB



TJB / RJB



BHO

MATERIALS

The instrument is available in the following material and more others on request:

COD	MATERIAL
A	Carbon Steel
J	SS316
JL	SS316L
LF2	A350 LF2

Carbon steel and LF2 steel are supplied electrolitic galvanized. On request they can be painted.
The stainless steel version is in SS 316 / 316L dual grade so the codes J and JL are the same.

The glasses are in borosilicate or, on request, in aluminosilicate for very high temperatures.

The gaskets are in graphite or, for highly corrosive fluids, in PTFE.

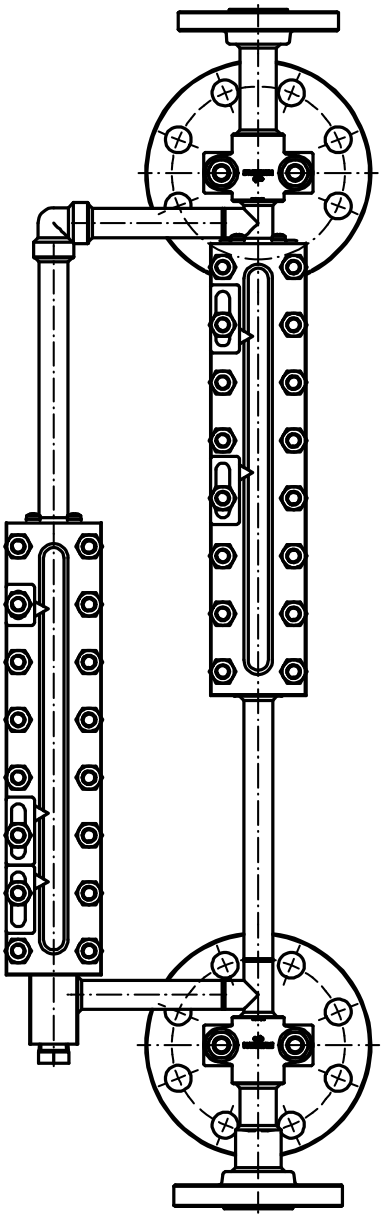

CONTINUOUS VISIBILITY

In the Reflex Level gauge R Series, when the liquid level is placed between two sections, the level indication is still granted, because the liquid has a dark color, so the continous visibility is always granted.

Despite that, Officine Orobiche can manufacture instruments with a staggered height section, so that the liquid meniscus is always visible. the different sections can be placed in any position needed by the customer.

OTHER ACCESSORIES AND VARIATIONS

- Galvanisation for carbon steel
- Panting as per Officine Orobiche standard or compliant with customer specifications
- Graduated scale in SS 316 in percentage, mm or other unit of measure on request, both of volume (m3, L, etc.) or length (ft, inch, etc.). On request, a double graduated scale can be installed with two different units of measure on the two sides of the instrument (for example mm and inch).
- Adjustable pointers
- Electrical tracing
- Insulation
- Antifrost plexiglas plate for cryogenic applications up to -196 °C
- Brackets to ease the movement



Antifrost version

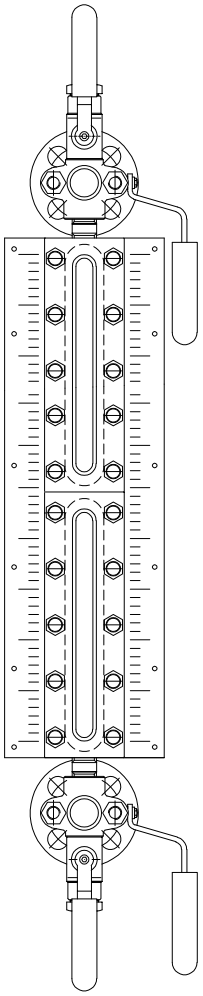

Double graduated scale

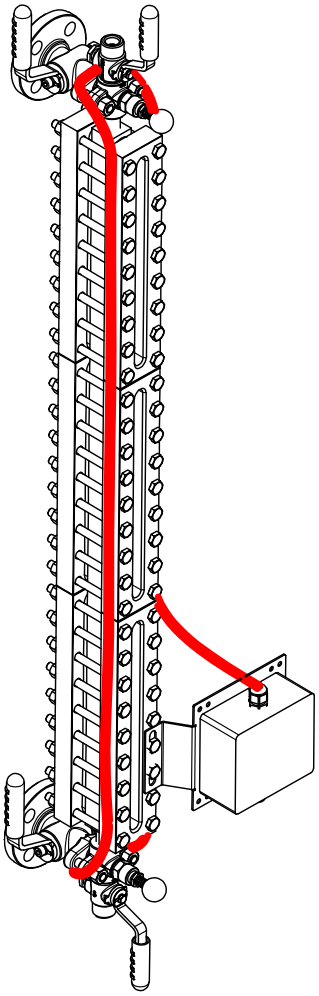

Electrical tracing

APPROVALS

On request, the instrument can be supplied with an ATEX declaration of suitability for classified areas, with mechanical protection: II 2G Ex h IIC/IIB Tx Gb, II 2d Ex h IIIC Tx Db.

SPARE PARTS

Our company database contains information about the instruments manufactured in 60 years, to request spare parts for an installed instrument state the F number written in the top-right of the label:



The standard spare kit is composed of Glass Crystal + Gasket + Asb. Free Cushion and it's coded as follows:

1	2	X	3	4

1	R	Reflex
	T	Trasparent
2	A	Width 30 mm
	B	Width 34 mm
X	1-9	Glass measure
3	B	Borosilicate glass
	AS	Aluminosilicate glass
4	G	Graphite gasket
	T	PTFE gasket

Example: RB7BG

MODEL CODE

AAA	BB	CC	D	EE	XX
Model	Measure	Valves type	Body material	Connections position	Any variation from standard

Example: RMB.27.NY.J.LL.

To request a quotation please state:

- Type of fluid (it's important to know if it's water steam)
- Safe or classified area
- design temperature and pressure
- Connections (type, DN, Rating)
- Connections range
- Material

Our technical and commercial departments are available to discuss any variation or customization not mentioned in this catalogue.

Officine Orobiche S.r.l.

Via Paglia, 22 - 24050 Zanica (Bergamo) - Italy
Tel. +39 035 4530 211

www.officineorobiche.it
info@officineorobiche.it